4-Hi stacked HBM DRAM with Logic Die

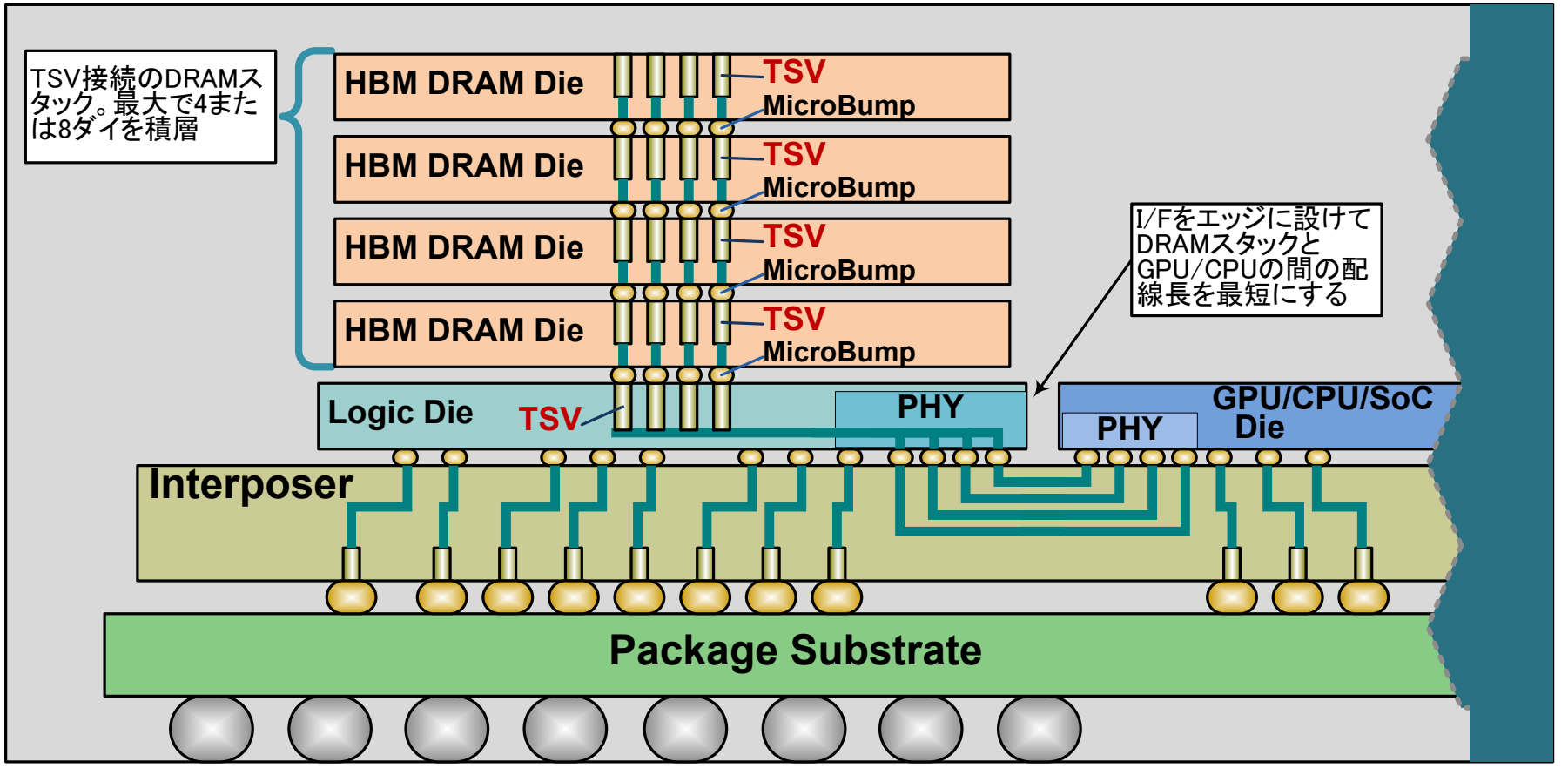

Copyright (c) 2014 Hiroshige Goto All rights reserved.