PowerVR SGX 55x MP4

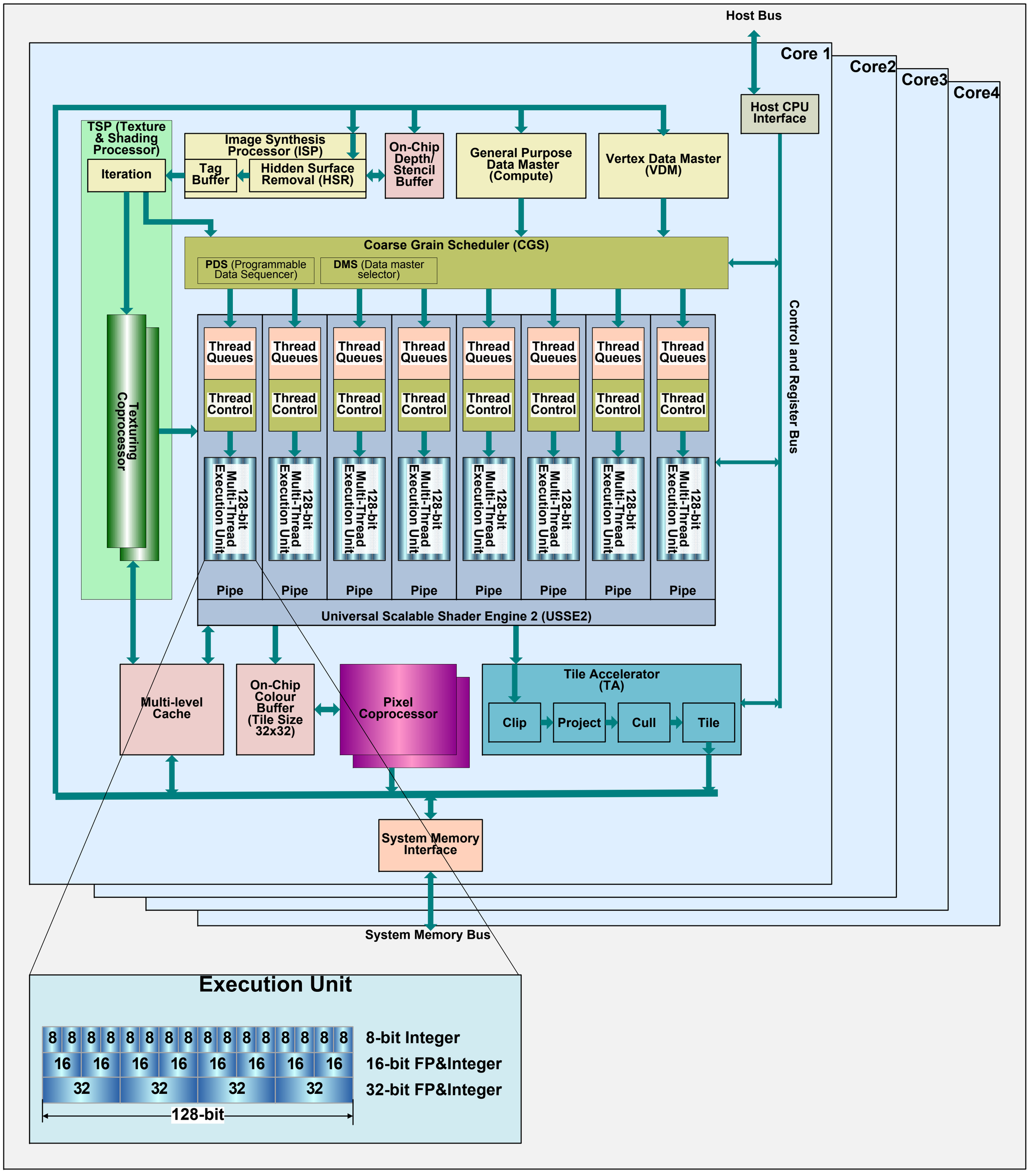

Copyright (c) 2014 Hiroshige Goto All rights reserved.