Kepler SMX in Tegra K1

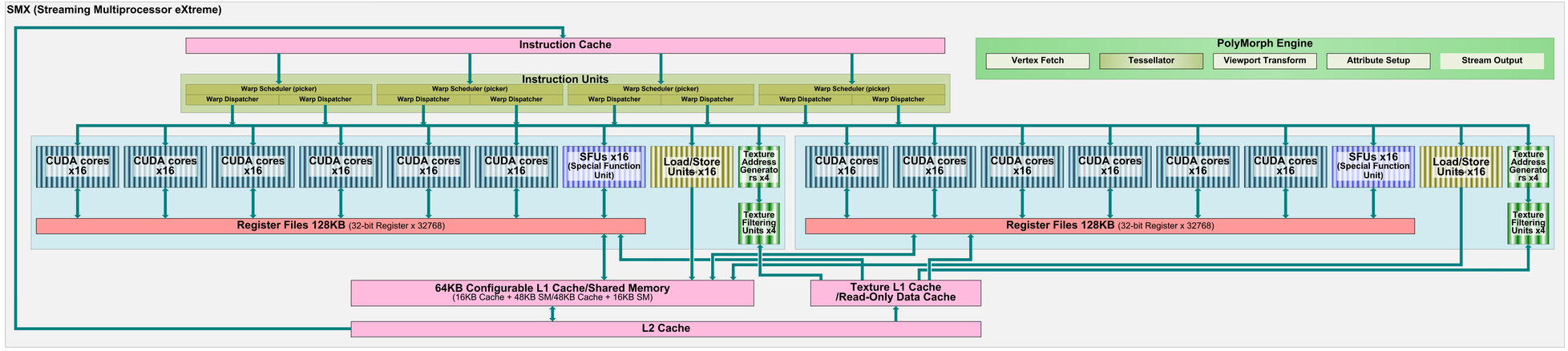

Copyright (c) 2014 Hiroshige Goto All rights reserved.