Stacked DRAM Solutions

3D Direct Stack

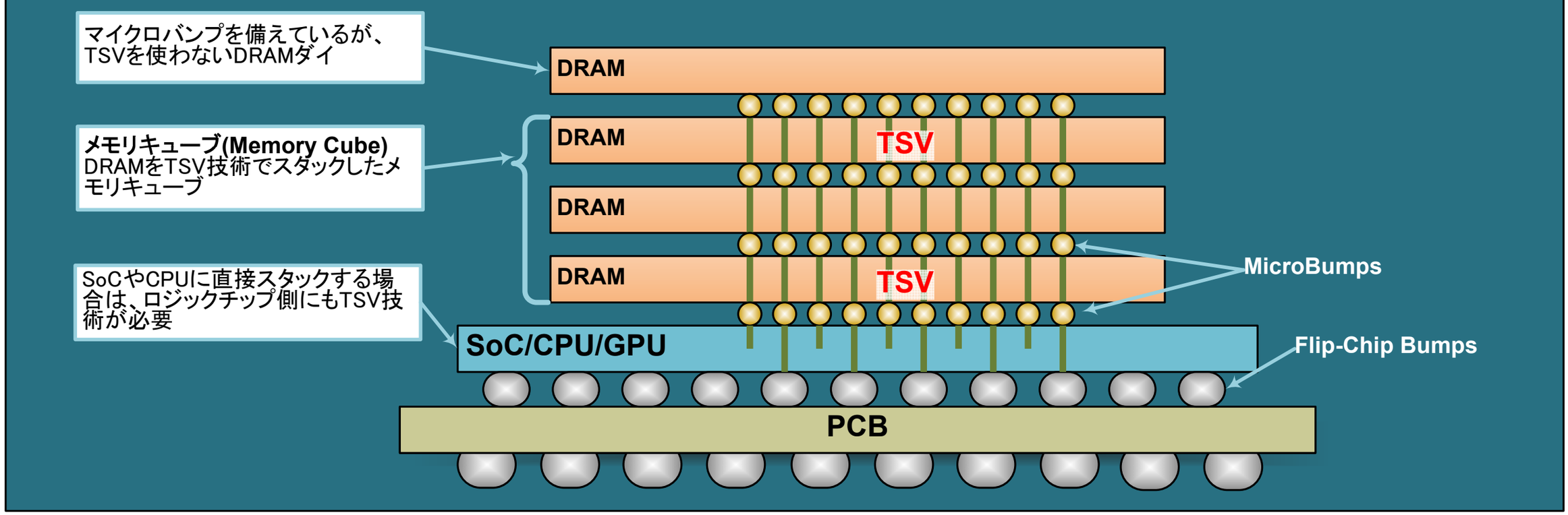

2.5D (TSV Silicon Interposer)

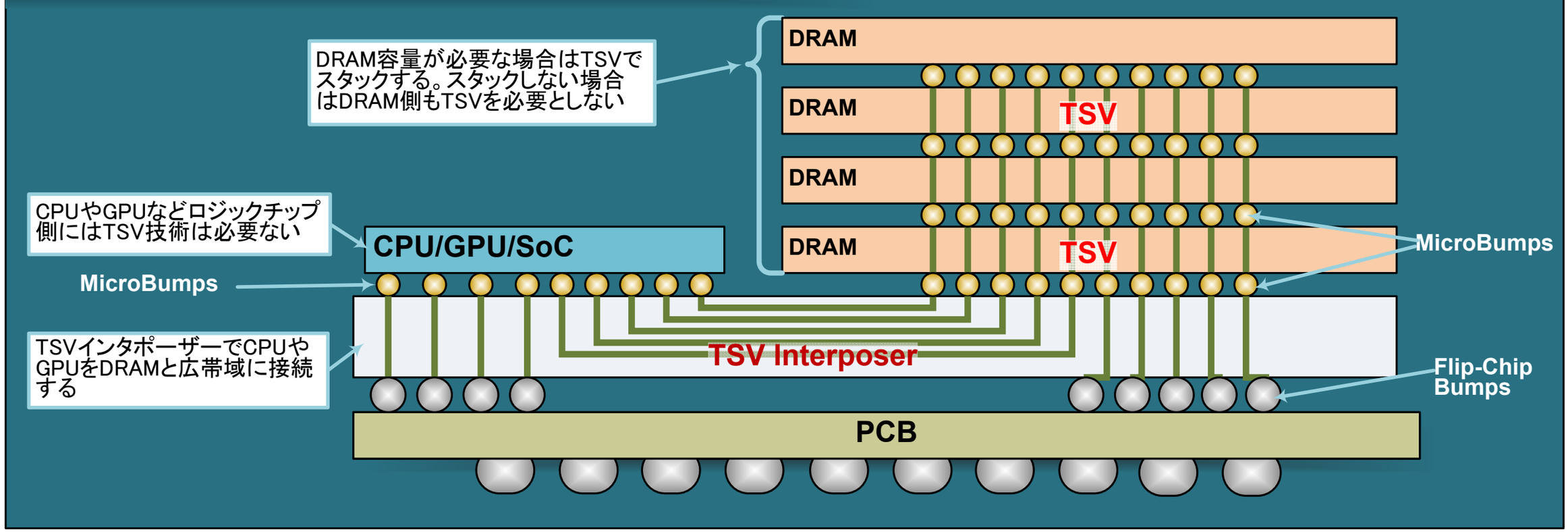

Copyright (c) 2013 Hiroshige Goto All rights reserved.