PowerVR SGX 55x MP4

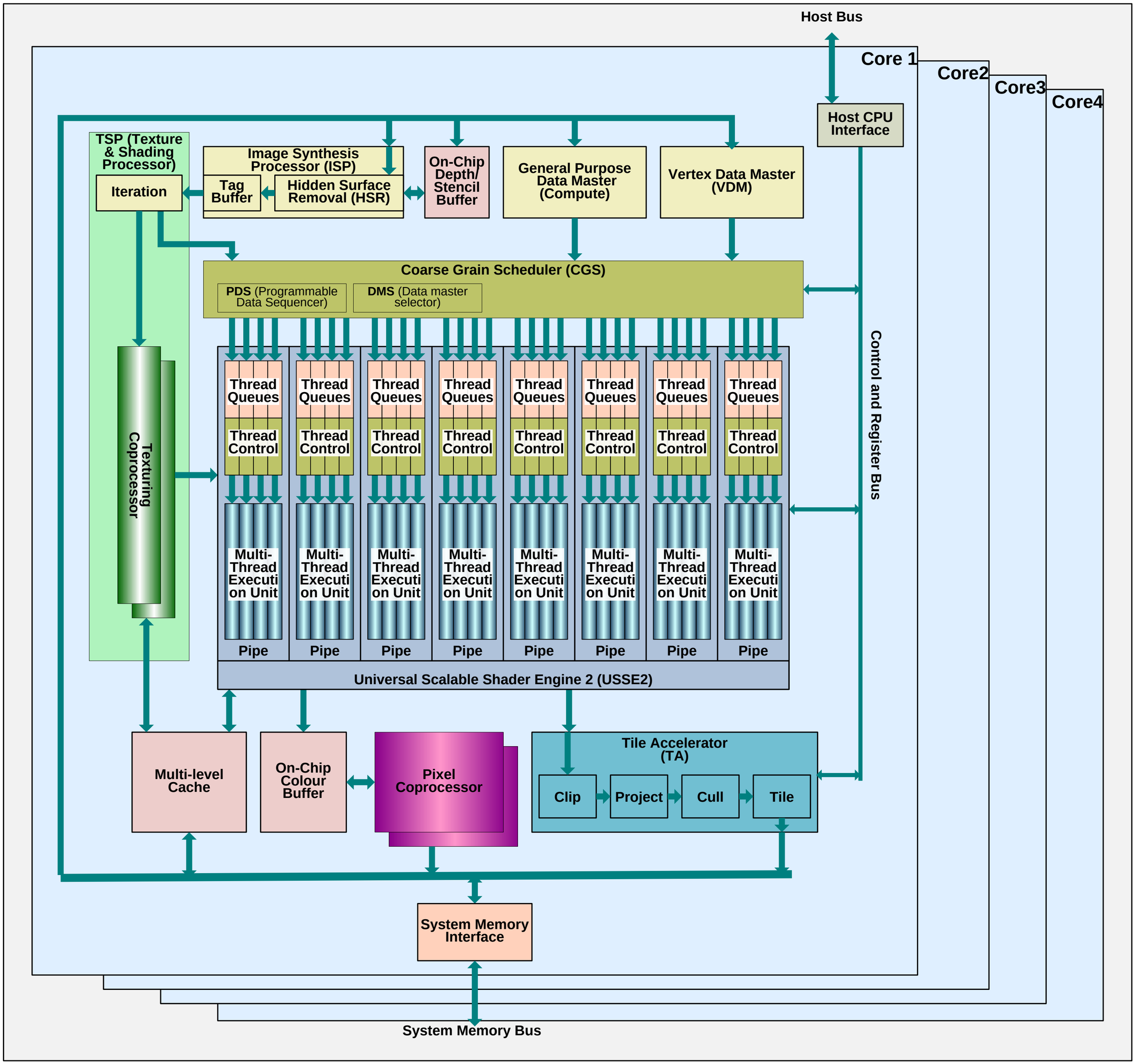

Copyright (c) 2012 Hiroshige Goto All rights reserved.