Sandy Bridge Socket R(LGA2011)

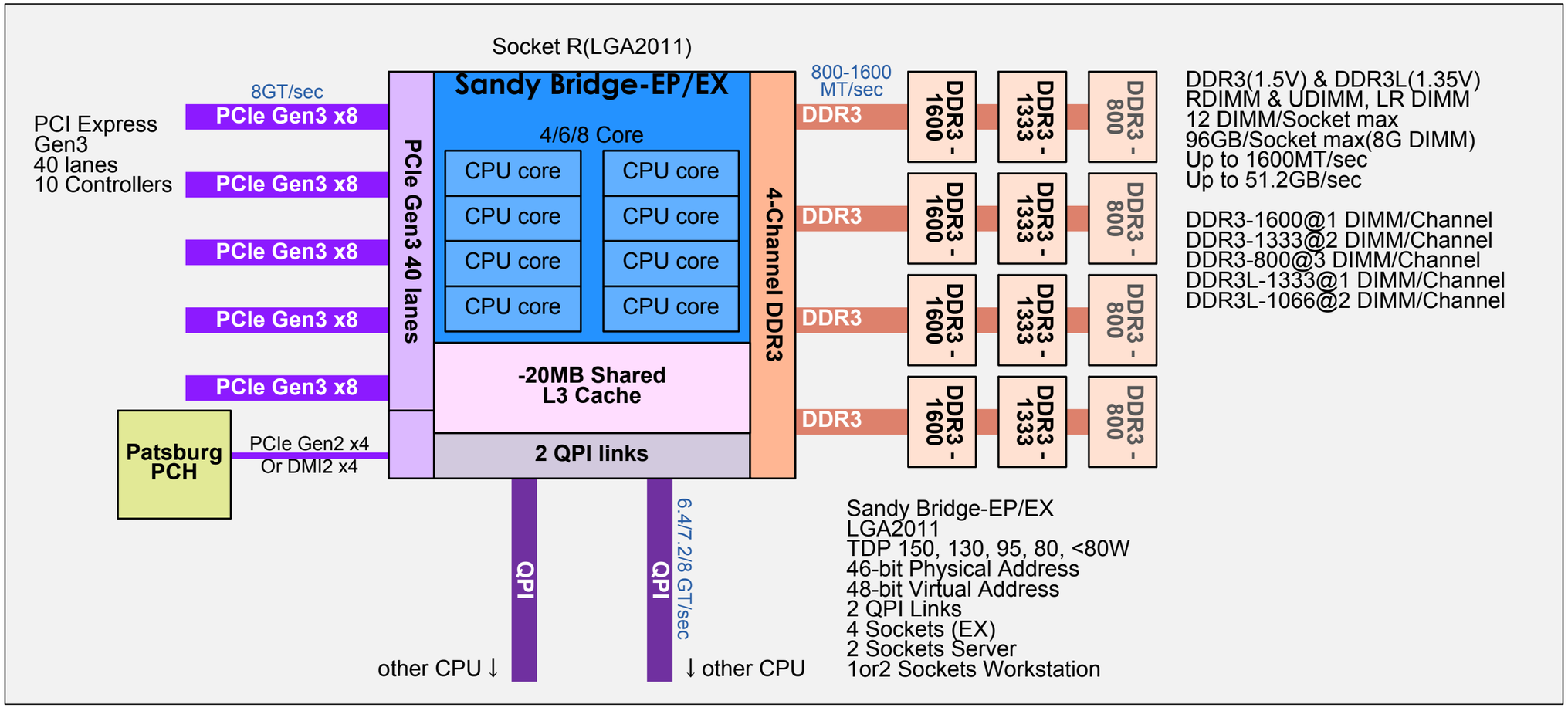

Copyright (c) 2010 Hiroshige Goto All rights reserved.