Sandy Bridge Socket B2 (LGA1356)

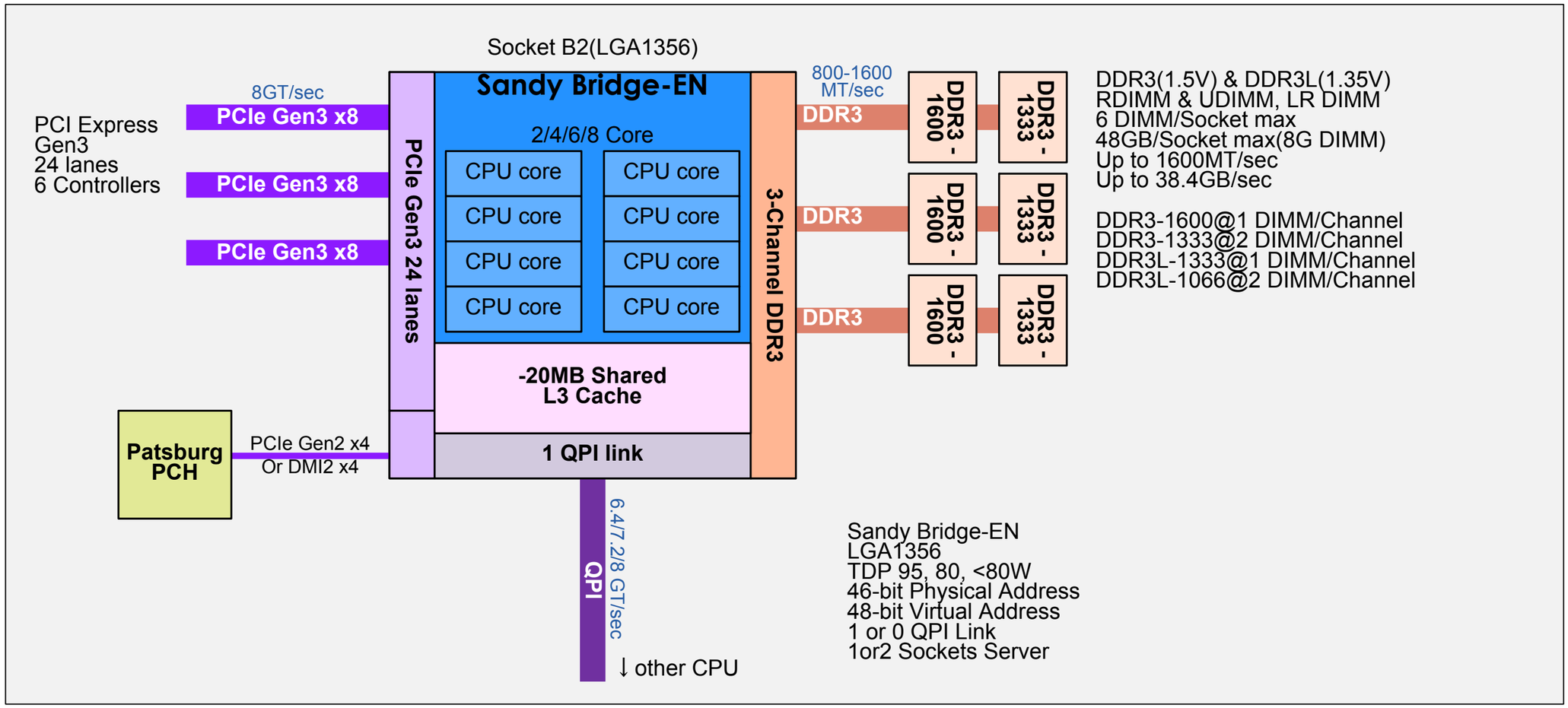

Copyright (c) 2010 Hiroshige Goto All rights reserved.