Xbox Series X Compute Unit Architecture

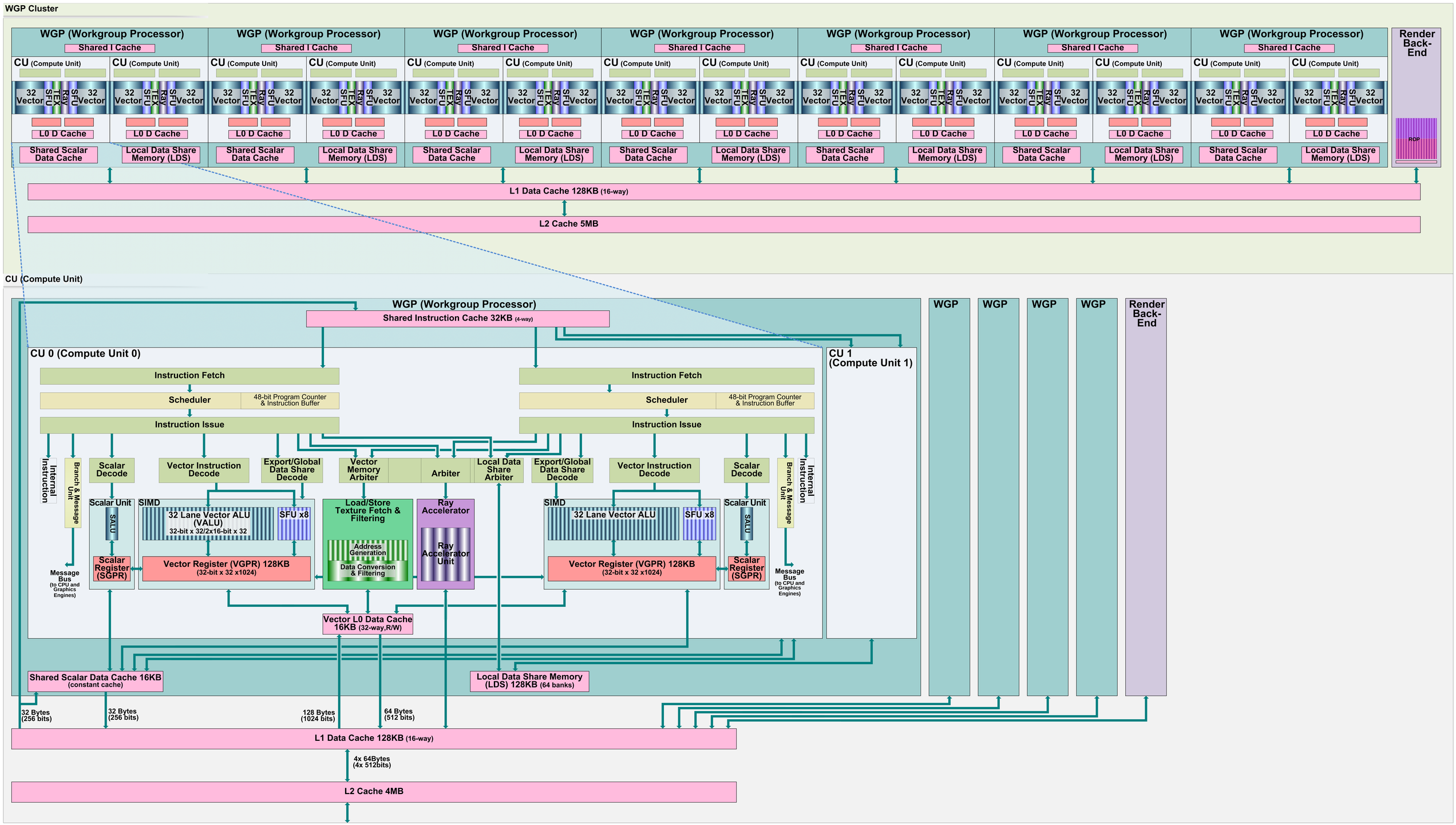

Copyright (c) 2020 Hiroshige Goto All rights reserved.