Intel Kaby Lake Graphics Core Diagram GT2

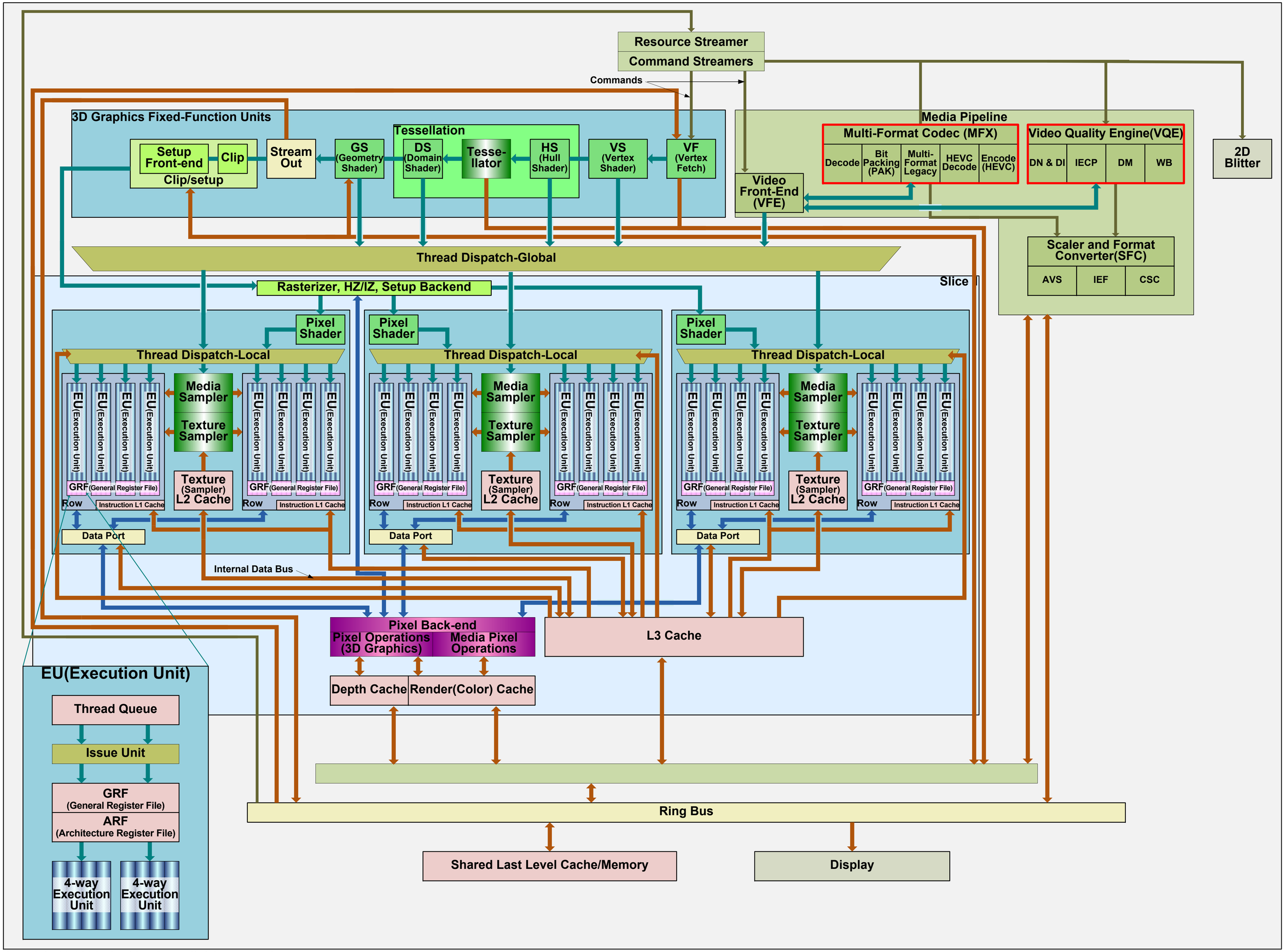

Copyright (c) 2016 Hiroshige Goto All rights reserved.