Nehalemファミリの内部構成

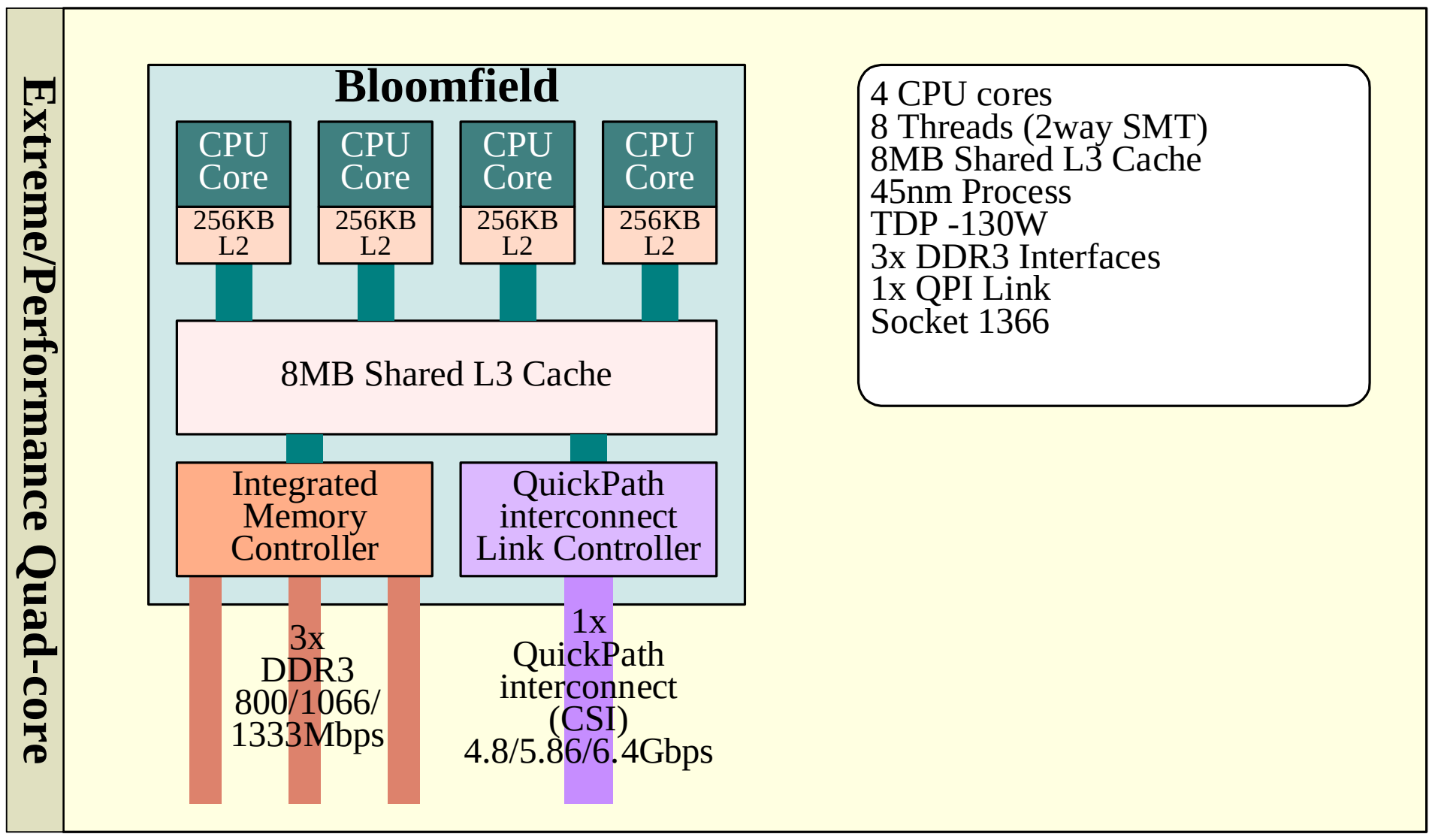

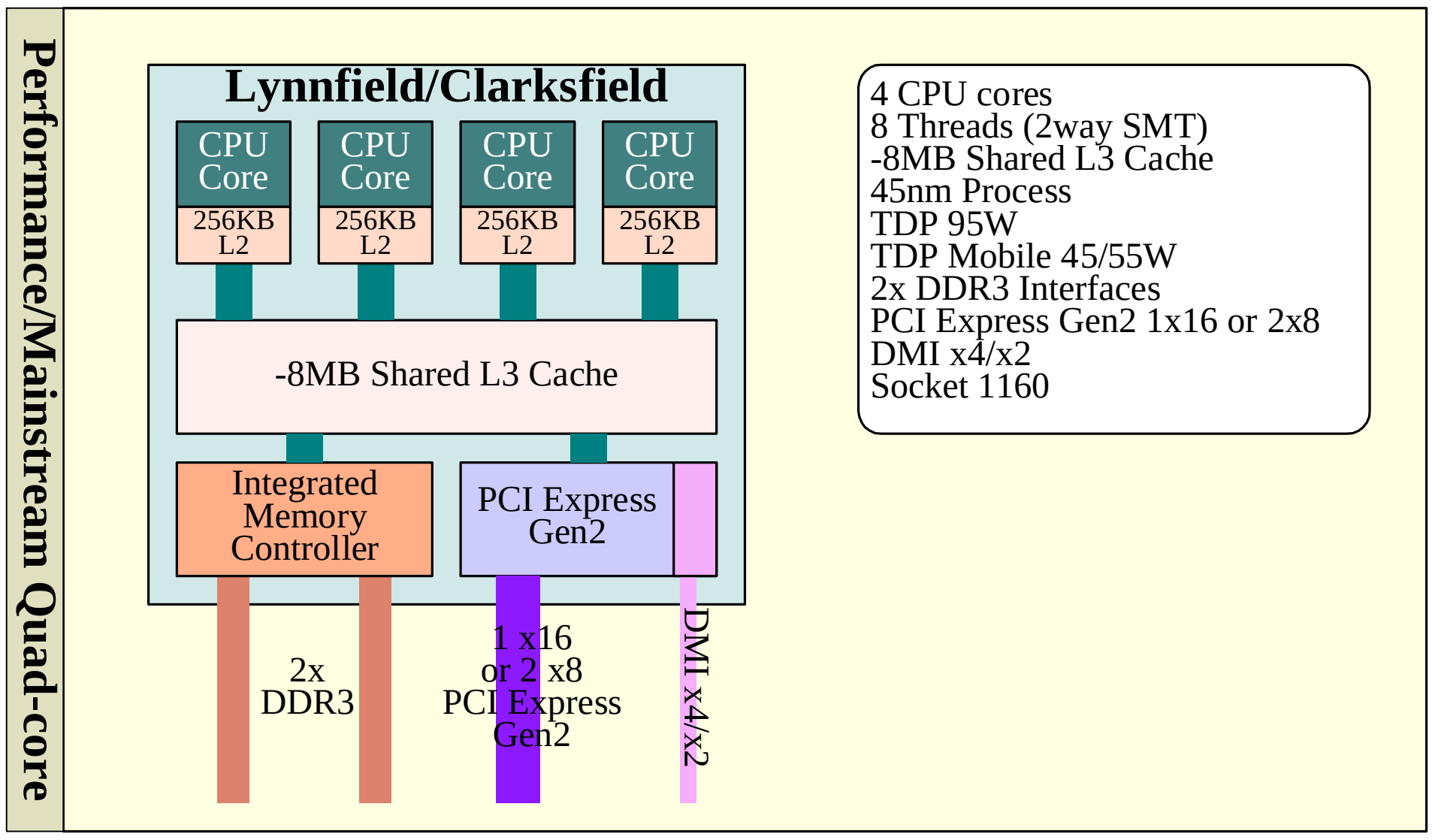

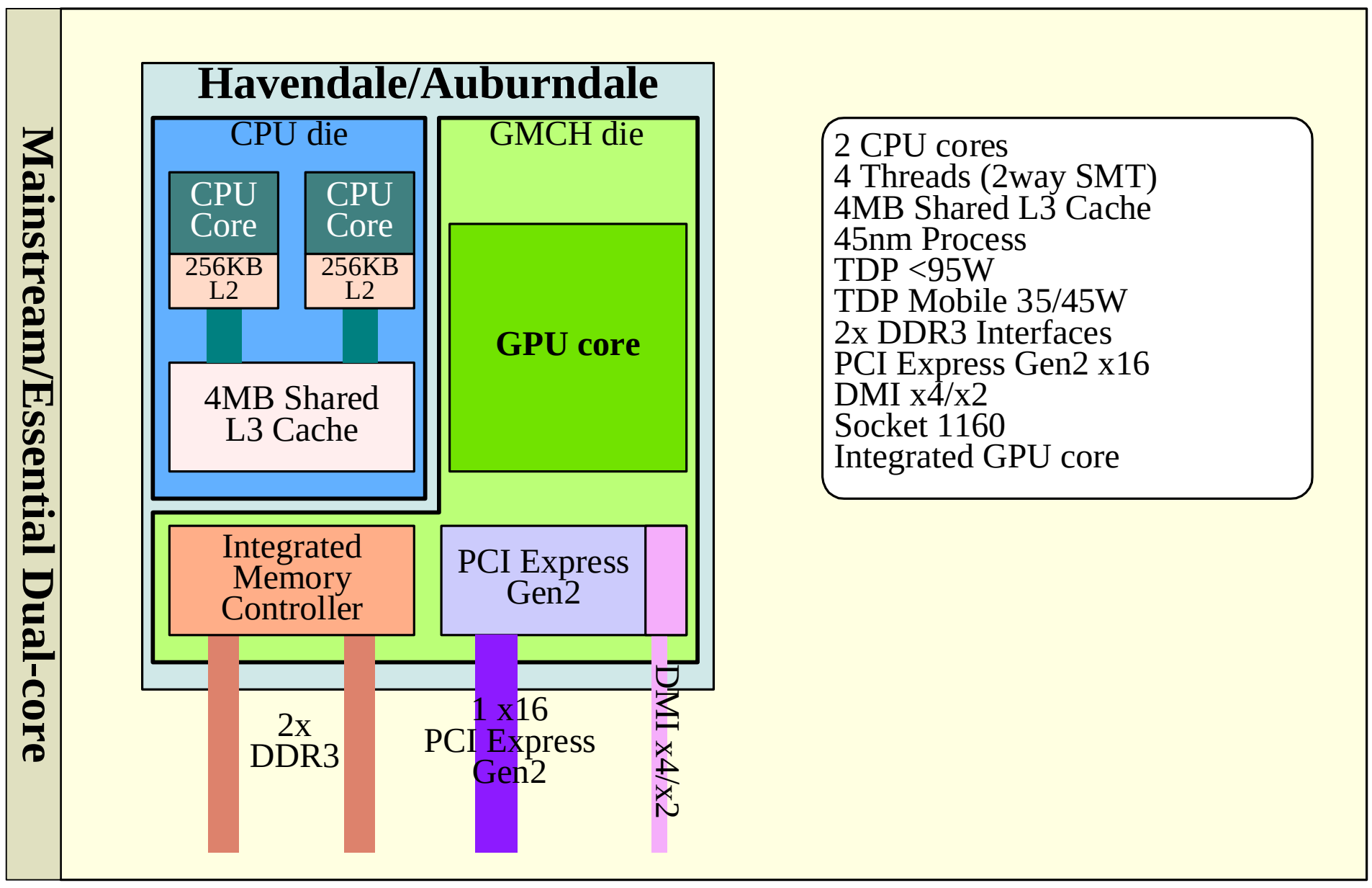

Copyright (c) 2008 Hiroshige Goto All rights reserved.