Xeon系Nehalemの様々な構成例

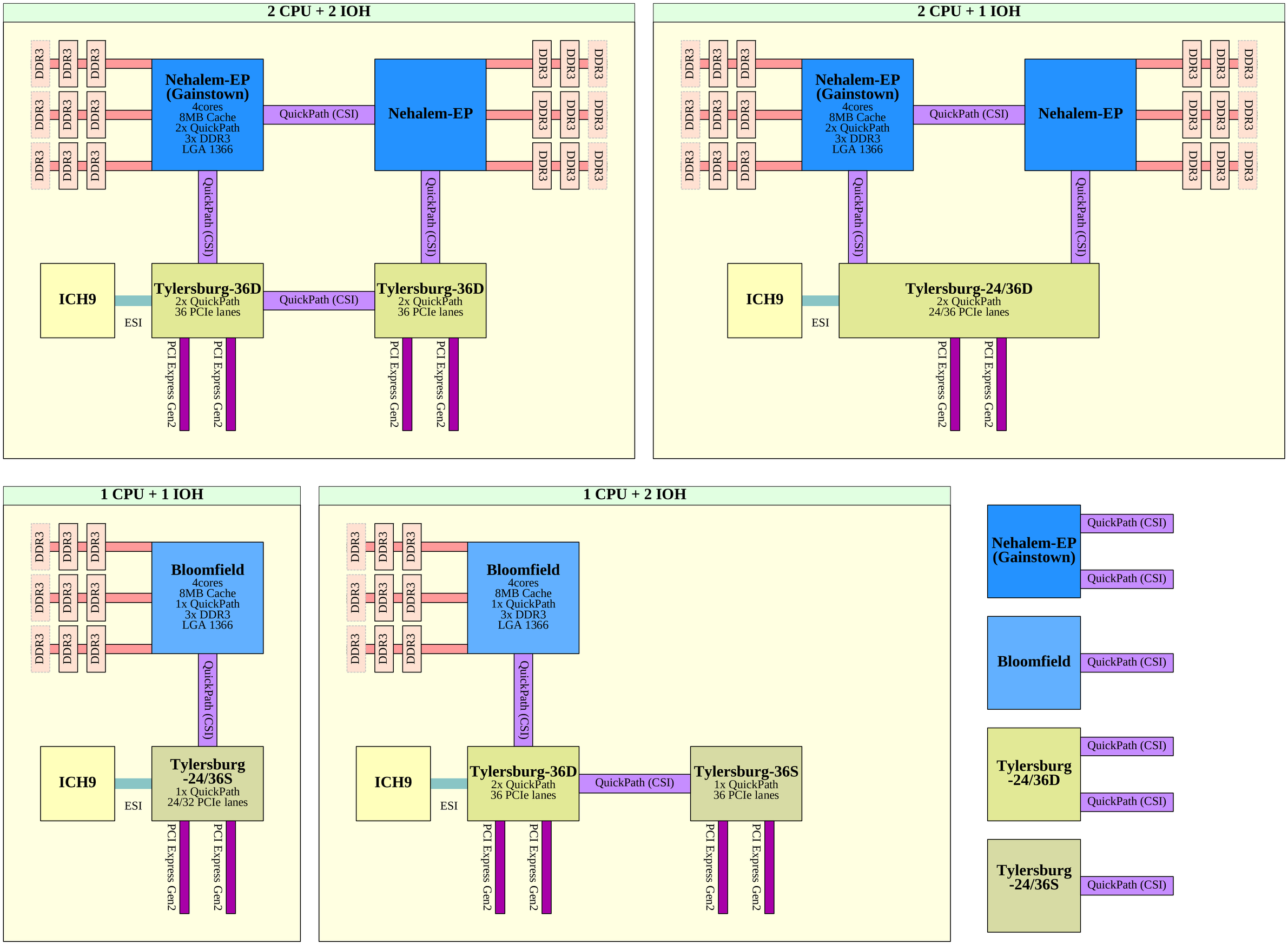

Copyright (c) 2008 Hiroshige Goto All rights reserved.