Nehalemファミリの内部構成

Oct-core MP

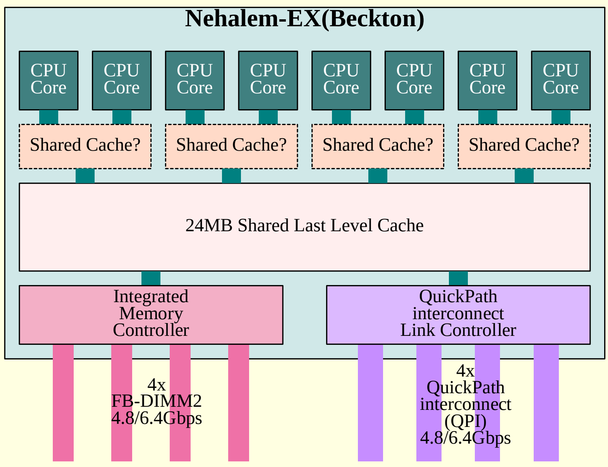

up to 8 CPU cores
up to 16 Threads (2way SMT)
24MB Shared Last Level Cache
45nm Process
TDP 130W/105W/90W
4 FBD2 Interfaces
4 QPI Links
Socket-LS (LGA 1567)
44 bits physical address
48 bits virtual address

Quad-core DP

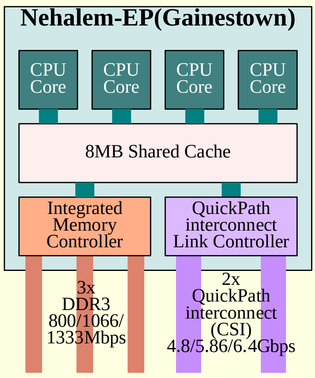

4 CPU cores
8 Threads (2way SMT)
8MB Shared Cache
45nm Process
TDP 130/80/60W
4x DDR3 Interfaces
1x QPI Link
Socket 1366

Extreme/Performance Quad-core

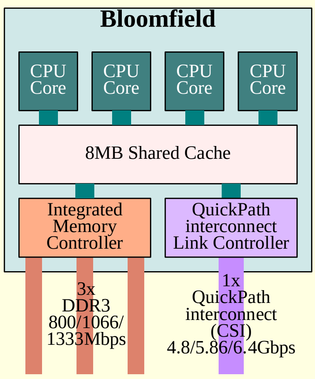

4 CPU cores
8 Threads (2way SMT)
8MB Shared Cache
45nm Process
TDP 130W
4x DDR3 Interfaces
1x QPI Link
Socket 1366

Performance/Mainstream Quad-core

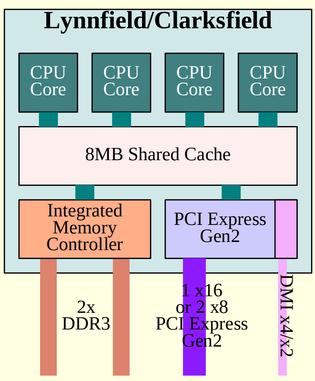

4 CPU cores
8 Threads (2way SMT)
-8MB Shared Cache
45nm Process
TDP 95W
2x DDR3 Interfaces
PCI Express Gen2 1x16 or 2x8
DMI x4/x2
Socket 1160

Mainstream/Essential Dual-core

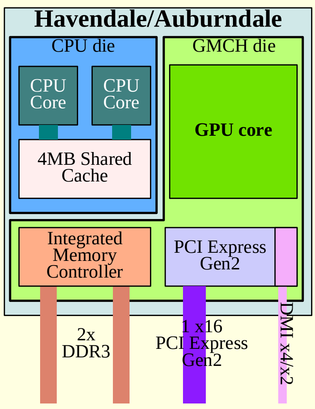

2 CPU cores
4 Threads (2way SMT)
4MB Shared Cache
45nm Process
TDP <95W
2x DDR3 Interfaces
PCI Express Gen2 x16
DMI x4/x2
Socket 1160
Integrated GPU core

Copyright (c) 2007 Hiroshige Goto All rights reserved.