Raw's three on-chip mesh networks

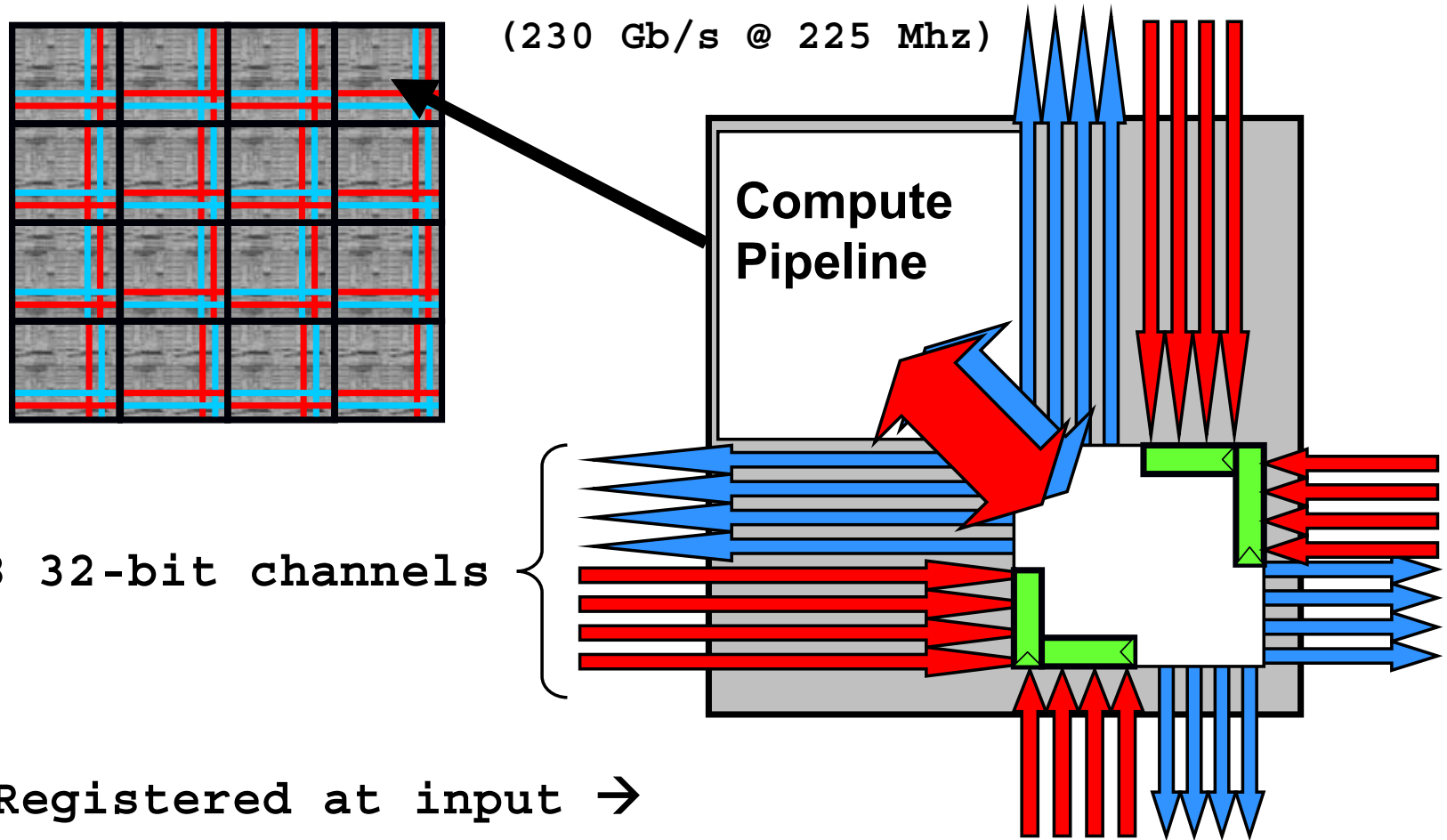

Registered at input →
longest wire = length of tile