ATI Processor in Torrenza

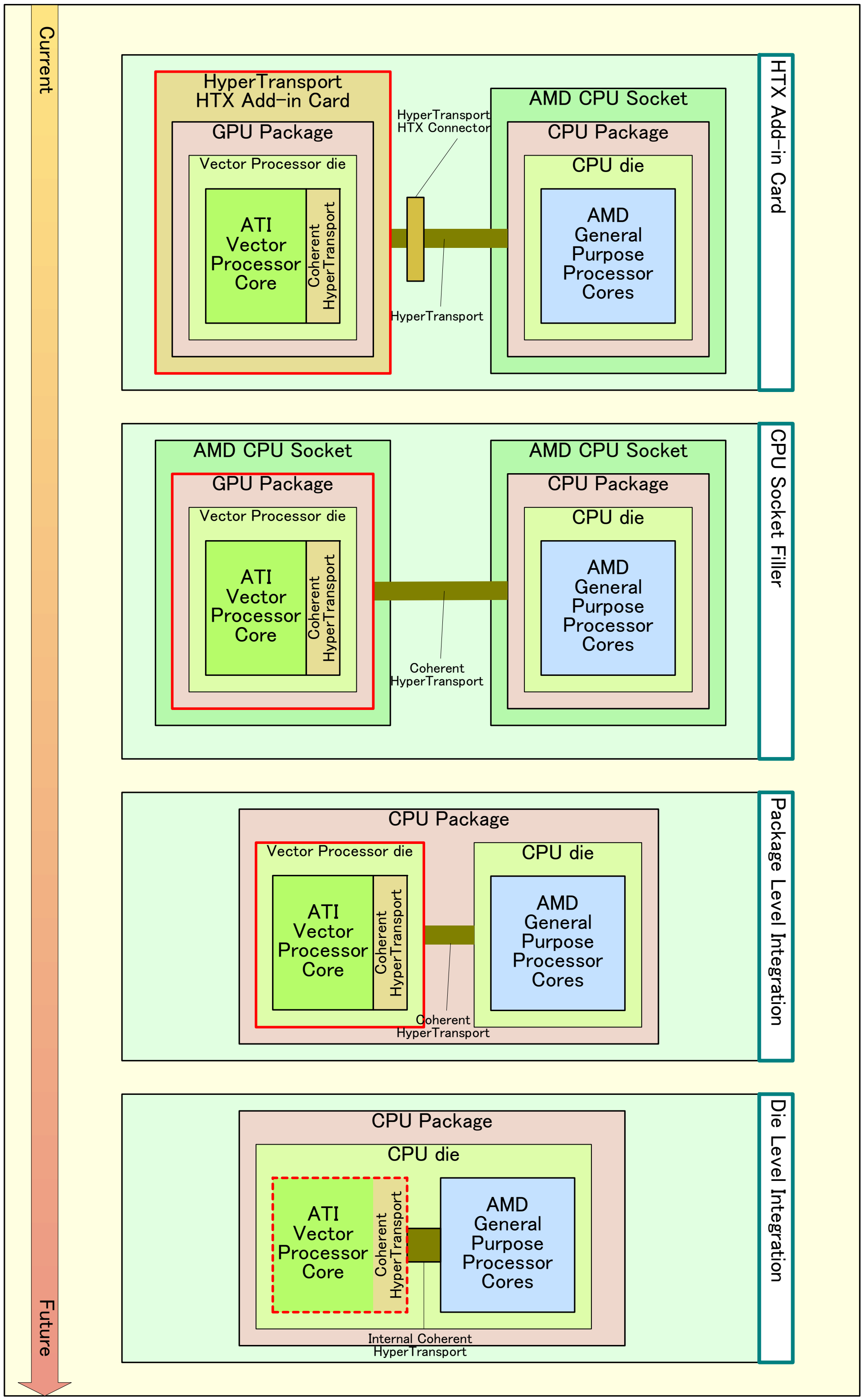

Copyright (c) 2006 Hiroshige Goto All rights reserved.