SMM (Streaming Multiprocessor Maxwell)

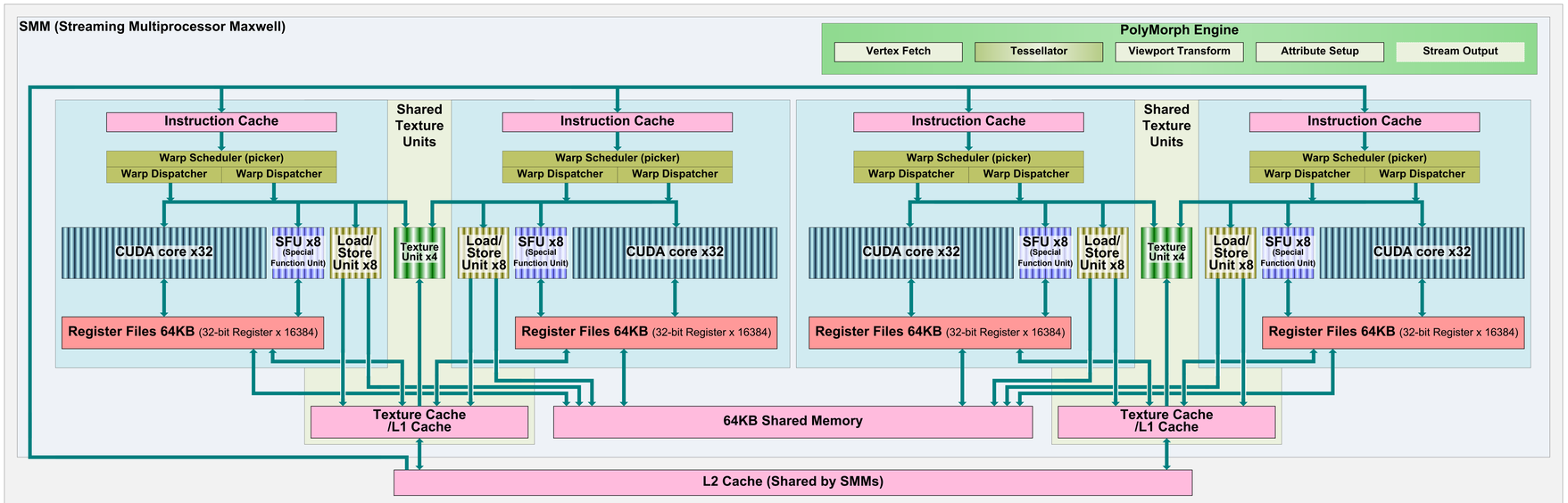

Copyright (c) 2014 Hiroshige Goto All rights reserved.