# AMD Bulldozer Architecture (estimated)

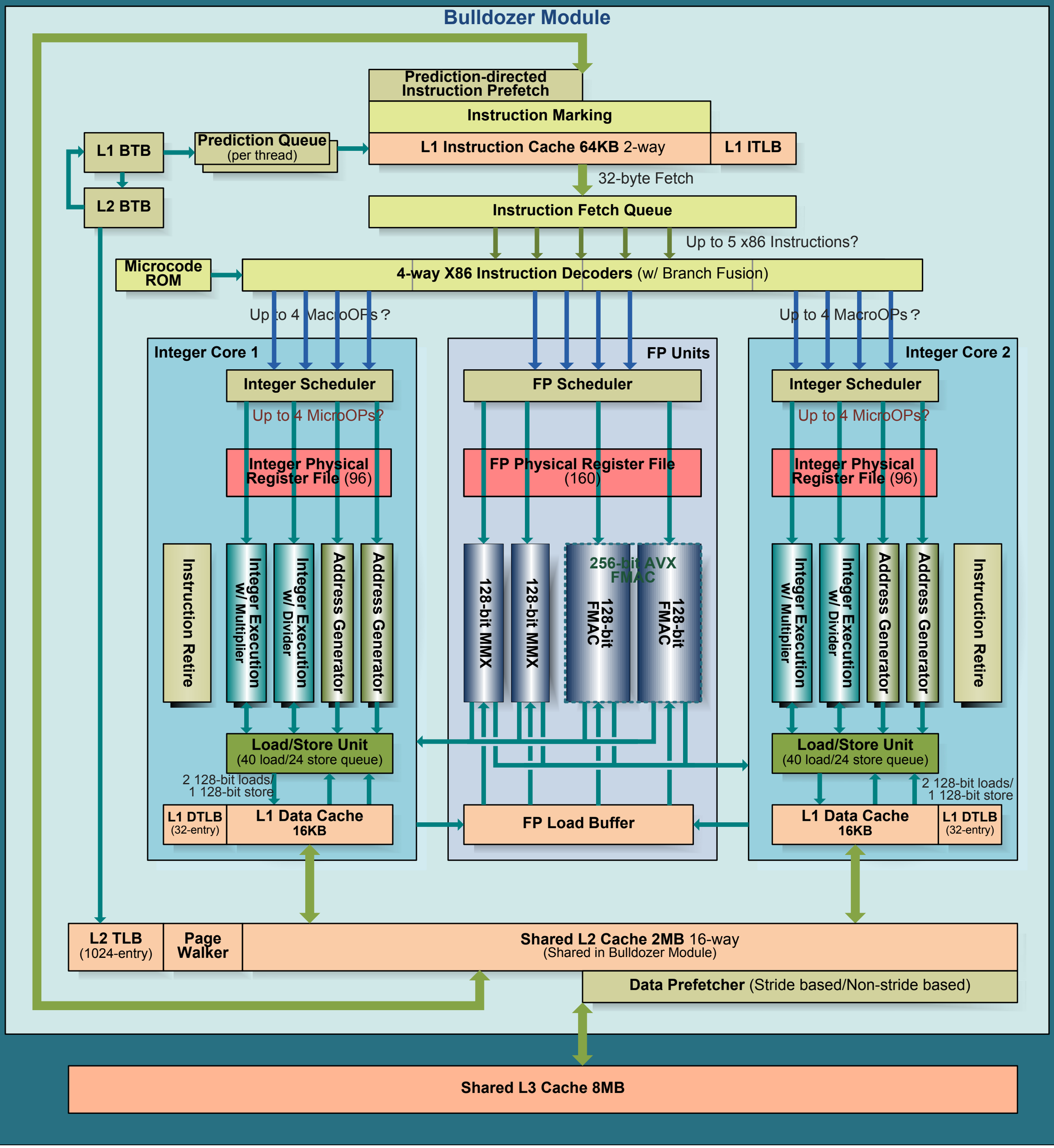


Copyright (c) 2010 Hiroshige Goto All rights reserved.