Xbox360(Xenon) System

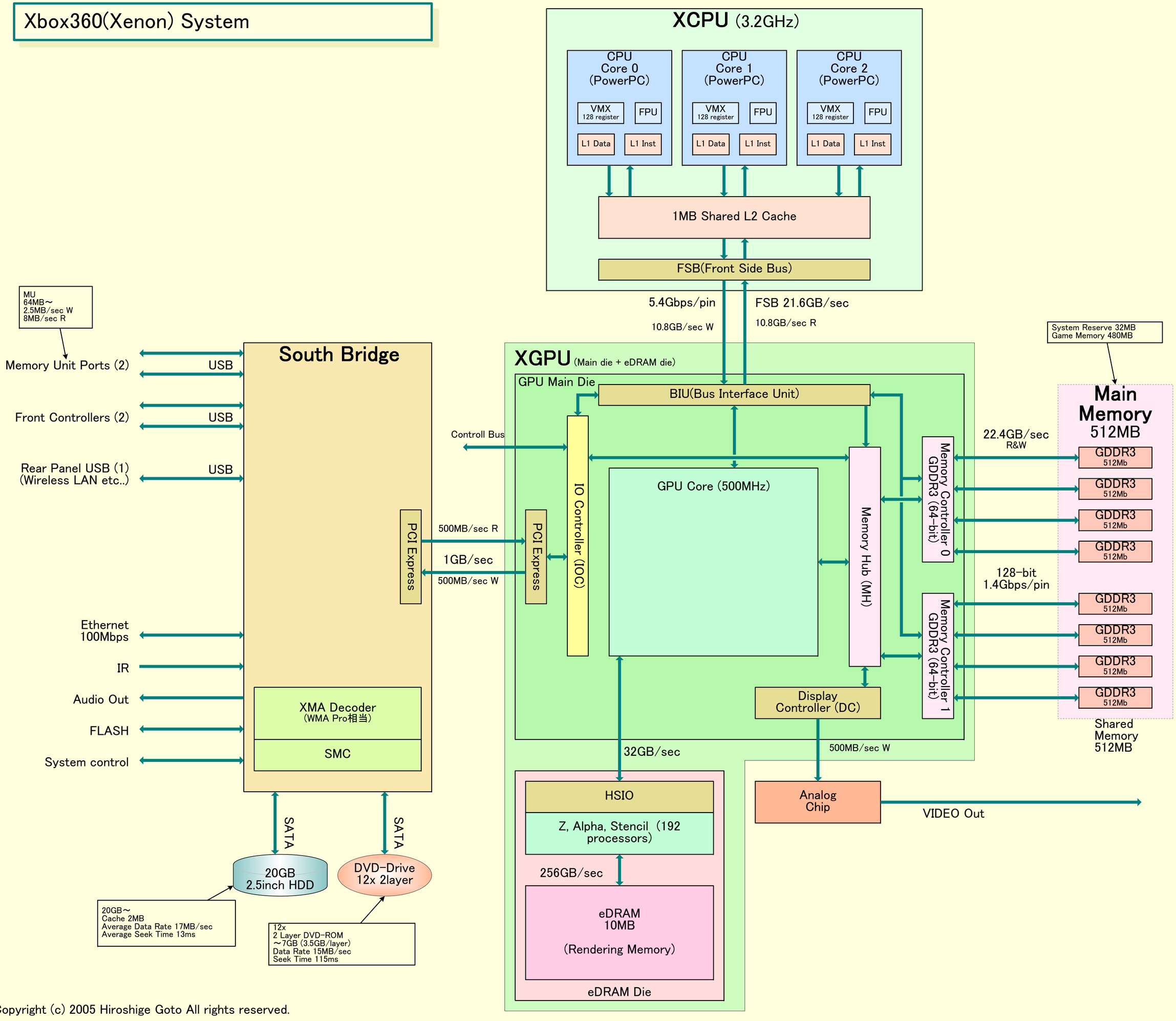

Copyright (c) 2005 Hiroshige Goto All rights reserved.