Pascal GP104 SM(Streaming Multiprocessor)

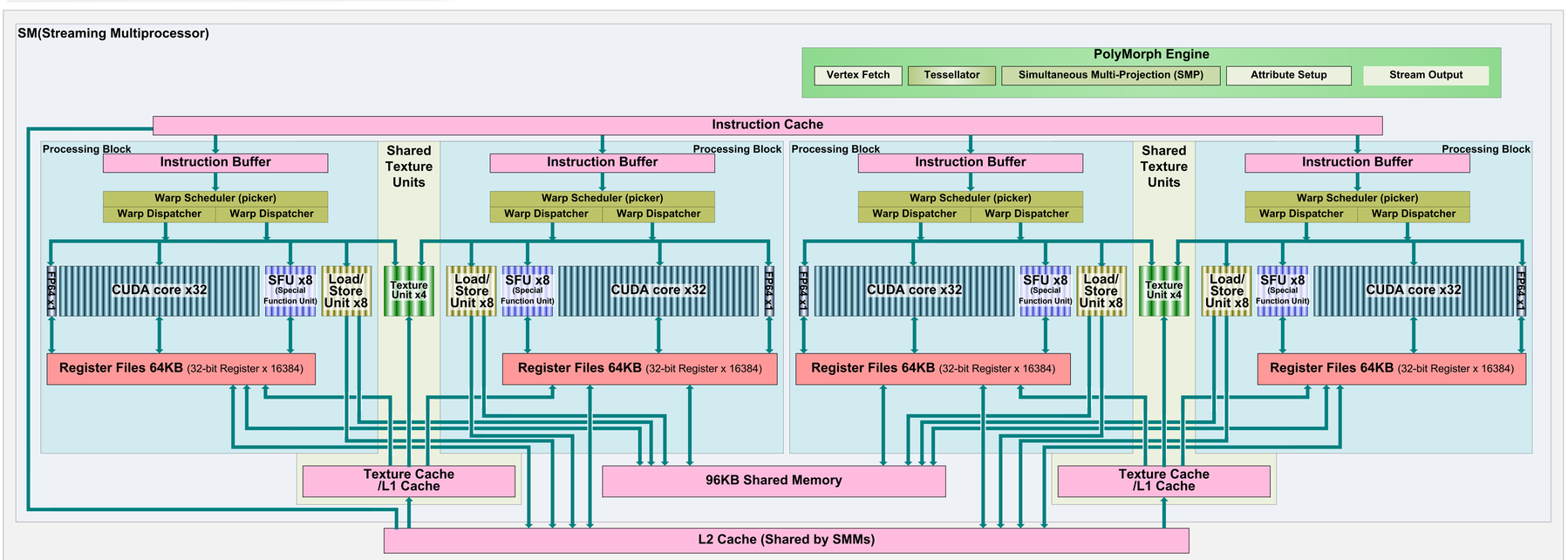

Copyright (c) 2014 Hiroshige Goto All rights reserved.