Intel 14nm CPUs

Kaby Lake 2Cores GT2 14nm

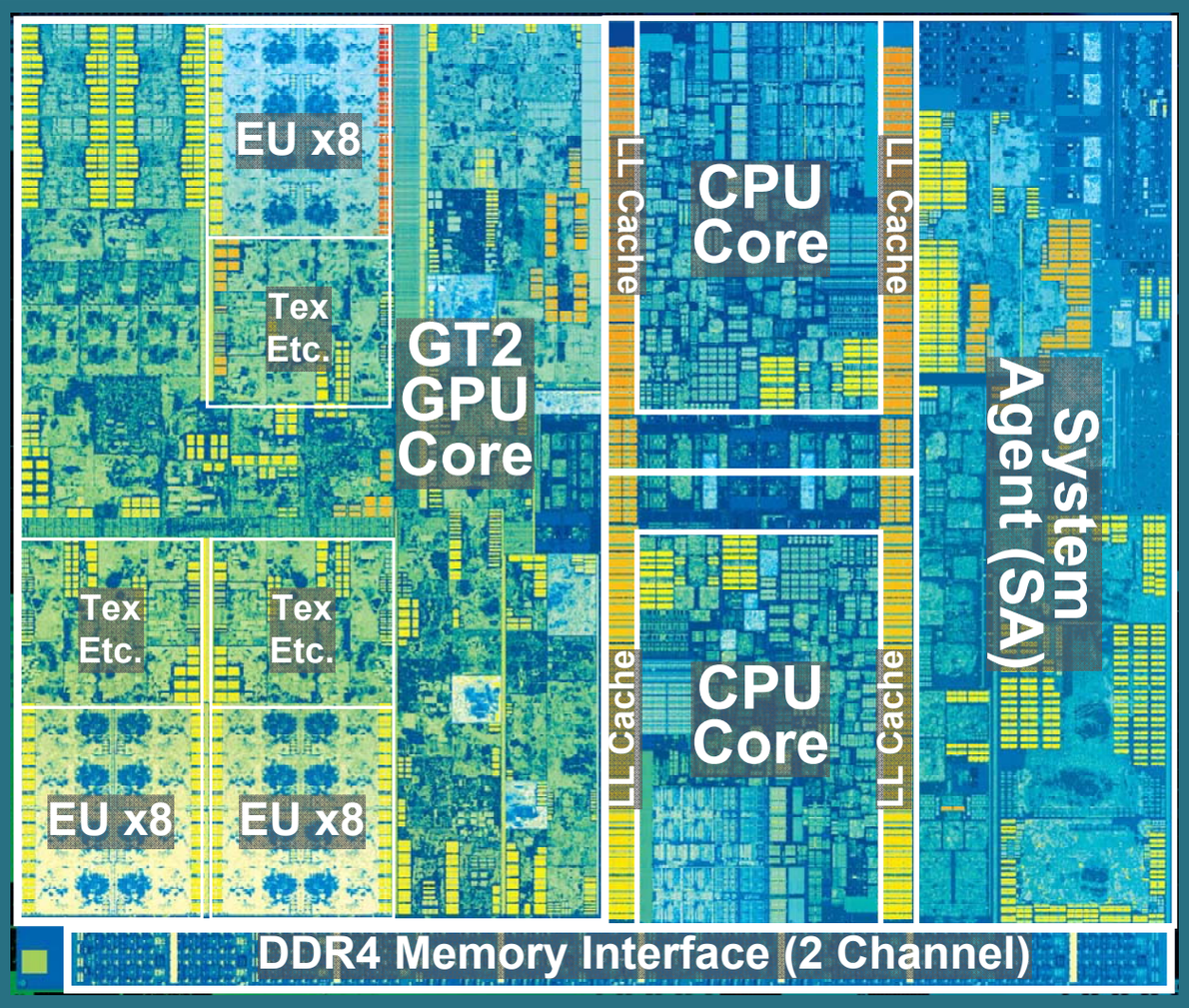

2 CPU cores
GPU core (GT2)
4MB LL Cache

14+ Process

Skylake 4Cores GT2 14nm

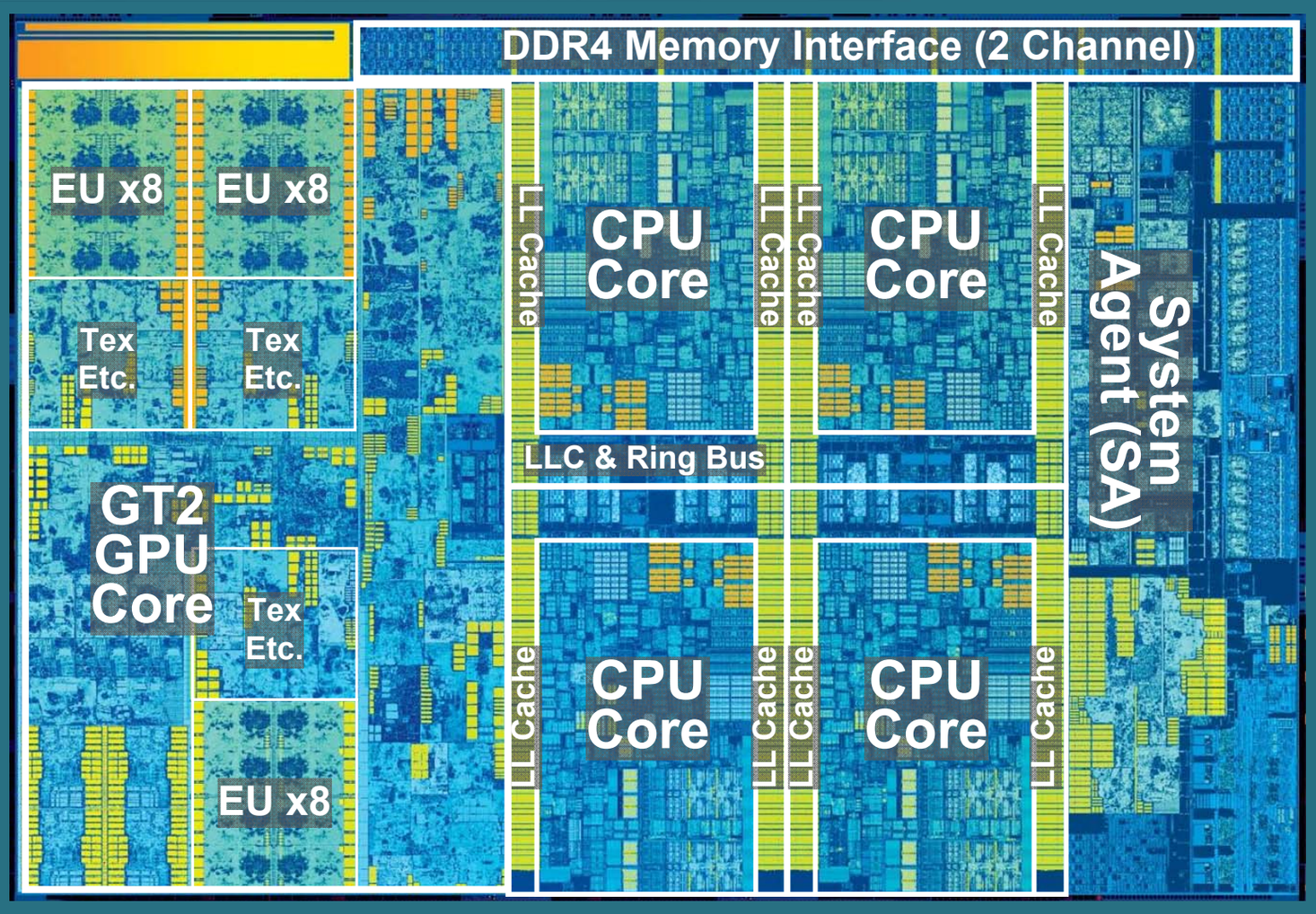

4 CPU cores
GPU core (GT2)
8MB LL Cache

14 nm Process
-122 mm2

Broadwell 2Cores GT2 14nm

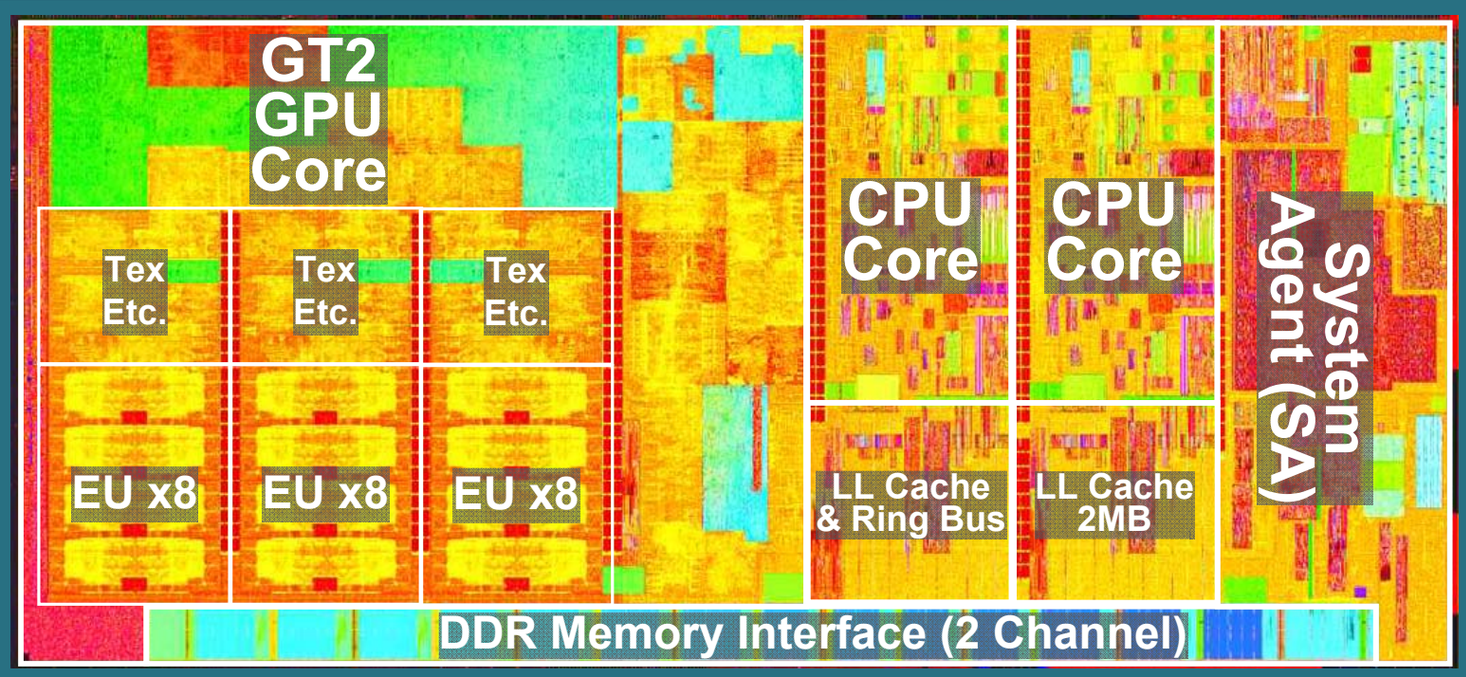

2 CPU cores
GPU core (GT2)
4MB LL Cache

14 nm Process
1.3B transistors
82 mm2

Copyright (c) 2016 Hiroshige Goto All rights reserved.