Nehalemファミリの内部構成

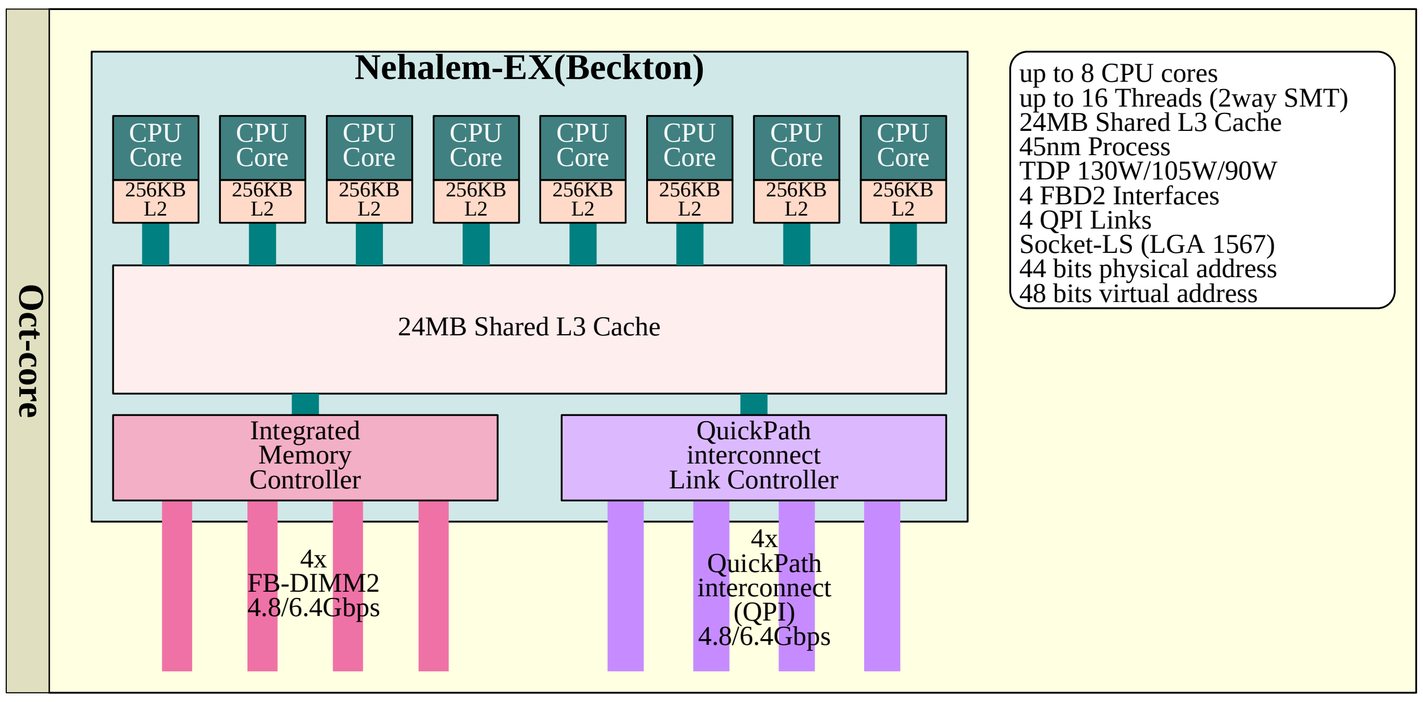

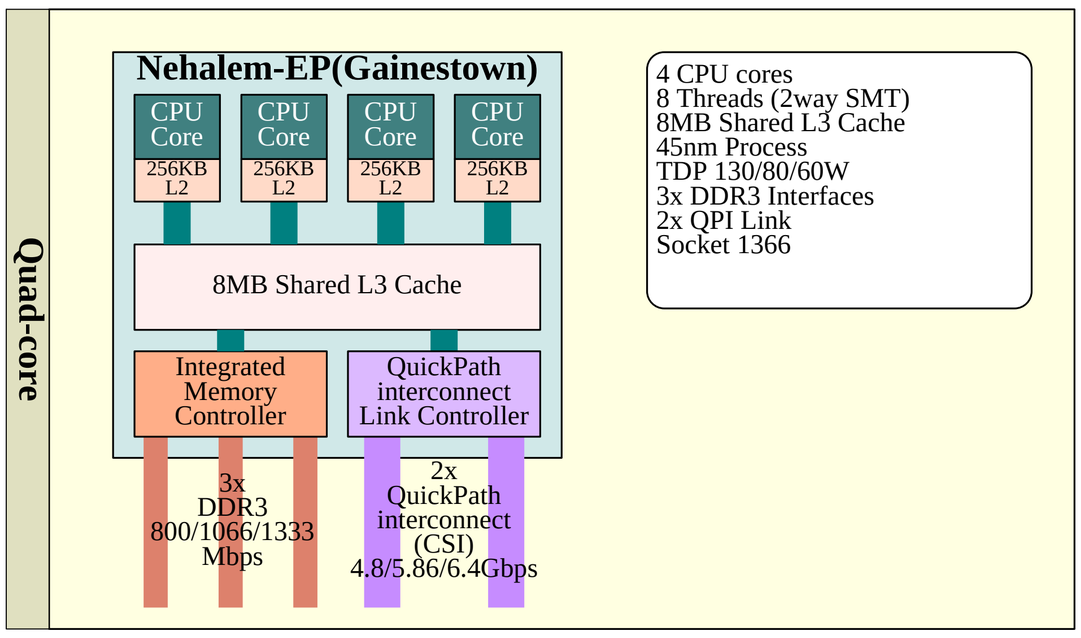

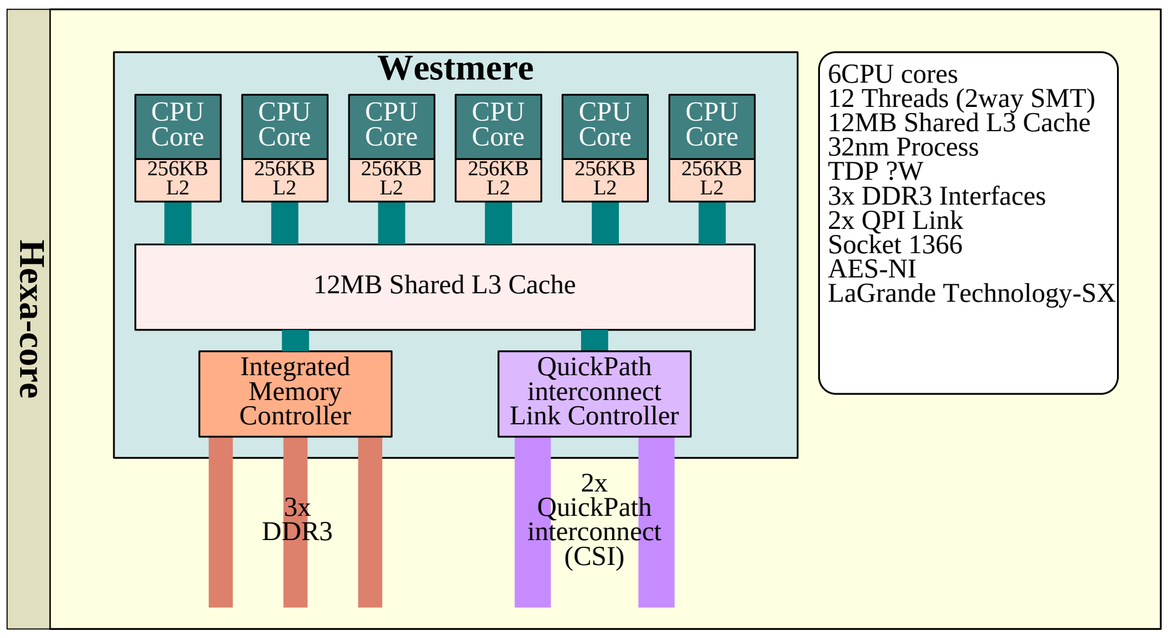

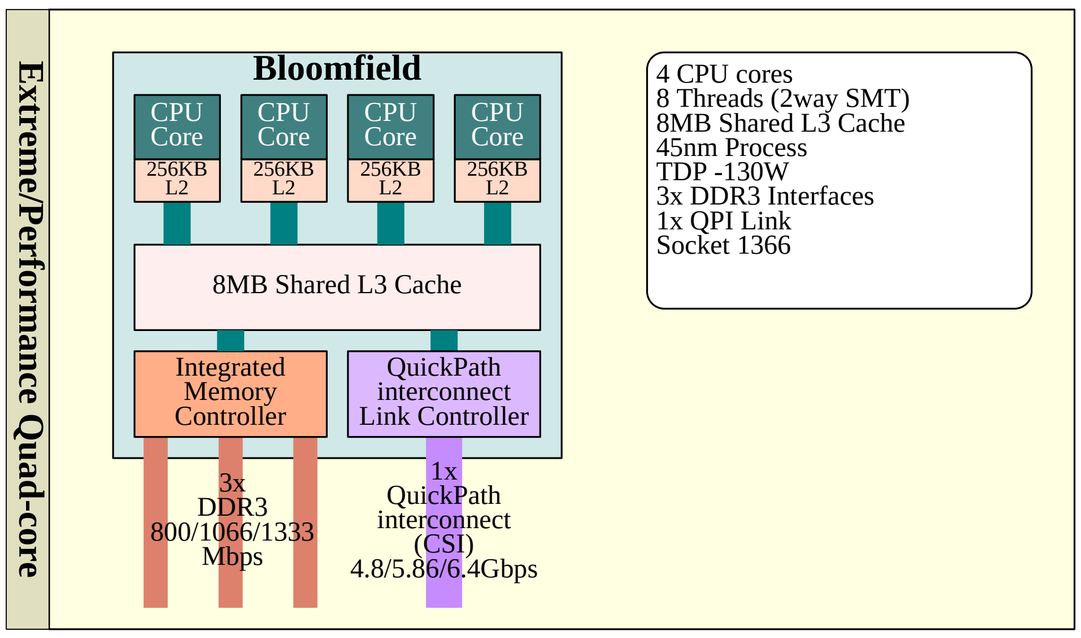

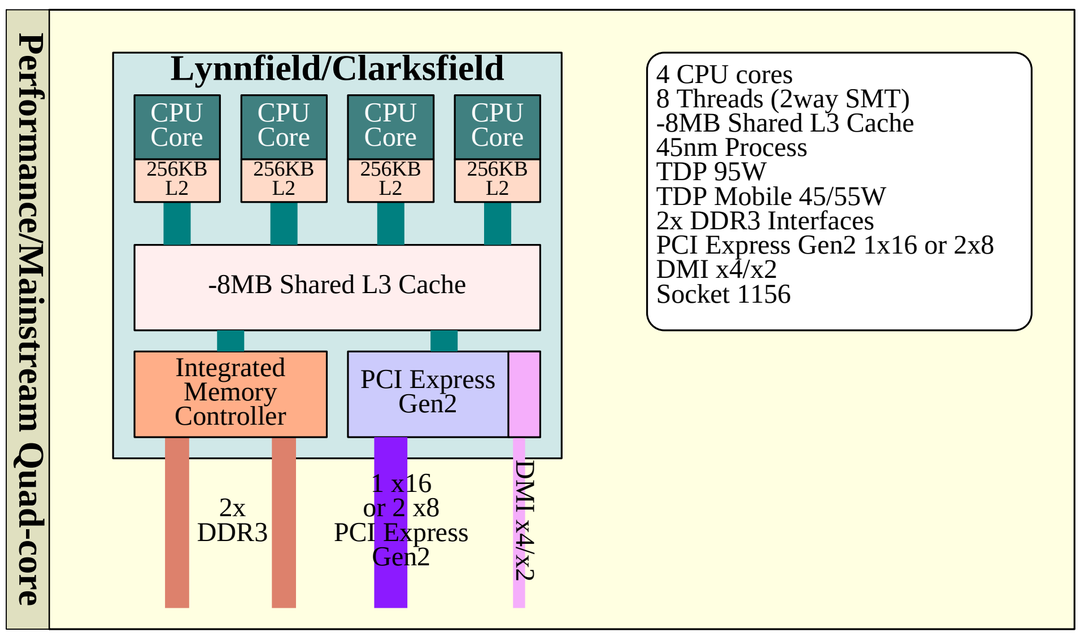

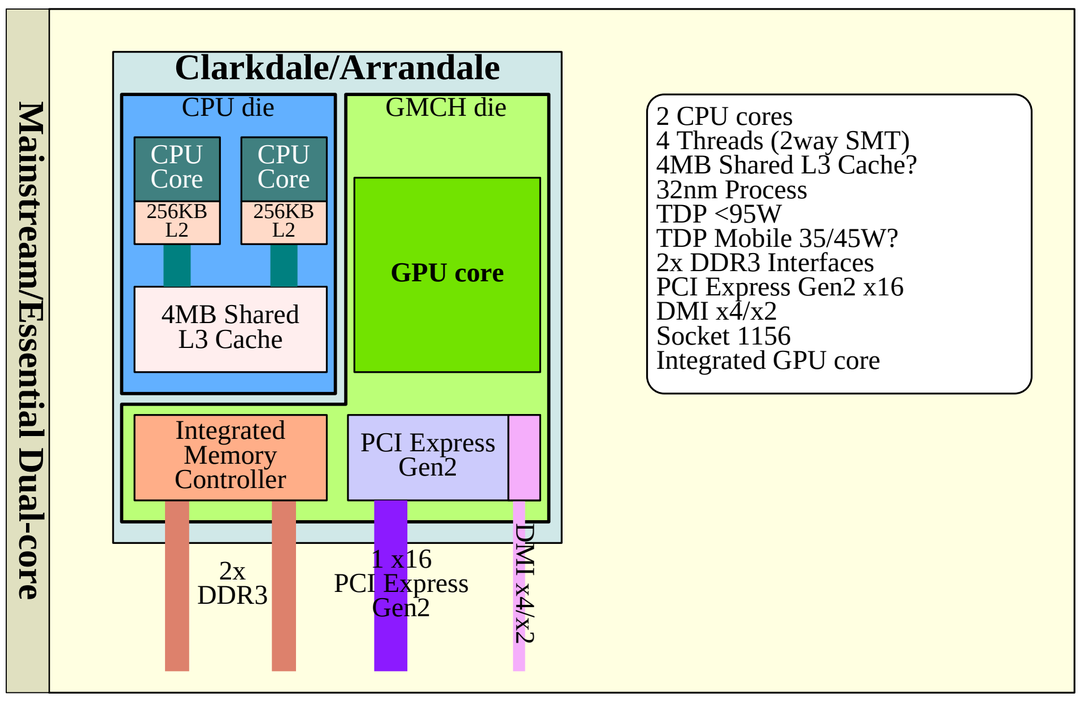

Copyright (c) 2009 Hiroshige Goto All rights reserved.